SCANIA

16:04-53

Edition 1

Manuell avgasbroms (EXB)

Manual exhaust brake (EXB)

Manuelle Abgasbremse (EXB)

Handbediende uitlaatrem (EXB)

Ralentisseur sur échappement manuel (EXB)

Freno de escape manual (EXB)

Freio motor (travão de escape) manual (EXB)

Freno motore manuale (EXB)

Manuaalinen pakokaasujarru (EXB)

Ręcznie sterowany hamulec wydechowy (górski) (EXB)

1 585 334

© Scania CV AB 2001, Sweden

Additional or optional equipment
Dotted cable Dotted detail

Glödlampstabell Bulb tabular		
Kod Code	Typ Type	
A	W2.1x9.5d-24V-2W	
B	BA9s-24V-2W	
C	BA15s-24V-15W	
D	SV8.5-24V-5W	L=39
E	BA15s-24V-10W	
F	BA15s-24V-5W	
G	24V-1.2W	
H	BA15s-24V-21W	
K	PK15-24v-75/70w	H4
L	PK5t-24V-55/50W	Bilux
M	W2x4.6d-24V-1.2W	
N	BA7s-24V-3W	
P	PK22s-24V-70W	H3
R	BA15s-24V-21W	

Des.	Path	Description	
B49	6	Switch	exhaust brake
C6	11	Connector	3x5-pole
C8	7		17-pole
C50	6	Junction box	15-pole
C56	13	Junction block	
C124		Connector	3-pole
C166	18	Joining sleeve	1-pole
D12	5	Diode	
G31	11	Ground	frame
P2	6	Central electric unit	
R11	6	Relay	ABS disconnector
V17	10	Solenoid valve	exhaust brake
V25	15		noise limiter

Colour code of electric cables	
Code	Colour
BK	Black
BN	Brown
RD	Red
OG	Orange
YE	Yellow
GN	Green
BU	Blue
VI	Violet
GY	Grey
WH	White
PK	Pink

Cable designation
150 · BN - 1 + P2 / 8 - 4
Cable marking
Cable colour (brown)
1) Conductor area, mm²
Connector designation
Contact housing
Position reference to component where the cable is connected
1) Unless otherwise stated, conductor area is 0.75 mm²

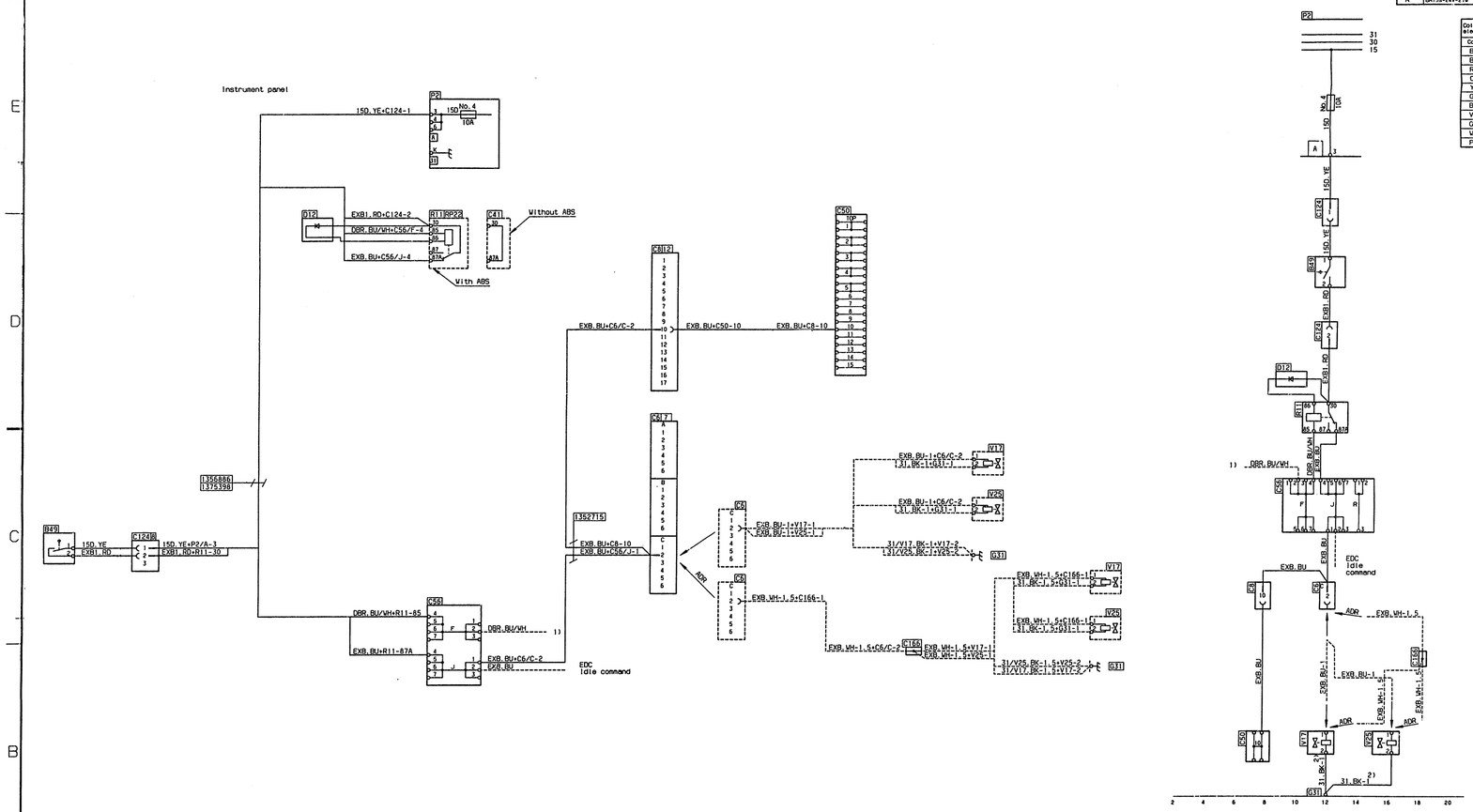

1) See circuit and wiring diagram ABS.
2) ADR trucks: area 1.5mm2.

Valid for this trucktype:
manual exhaust brake without white smoke limiter without Retarder without Opticruise.

1347070

Printed in Sweden by Novum Grafiska AB, Gbg 1995