SCANIA

16:14-00

Edition 1

Manskapshytt

Crew cab

Mannschaftsfahrerhaus

Cabine personnel

Cabina para dotación

Cabina equipaggio

Henkilökuntatilat

1 587 909

© Scania CV AB 2001, Sweden

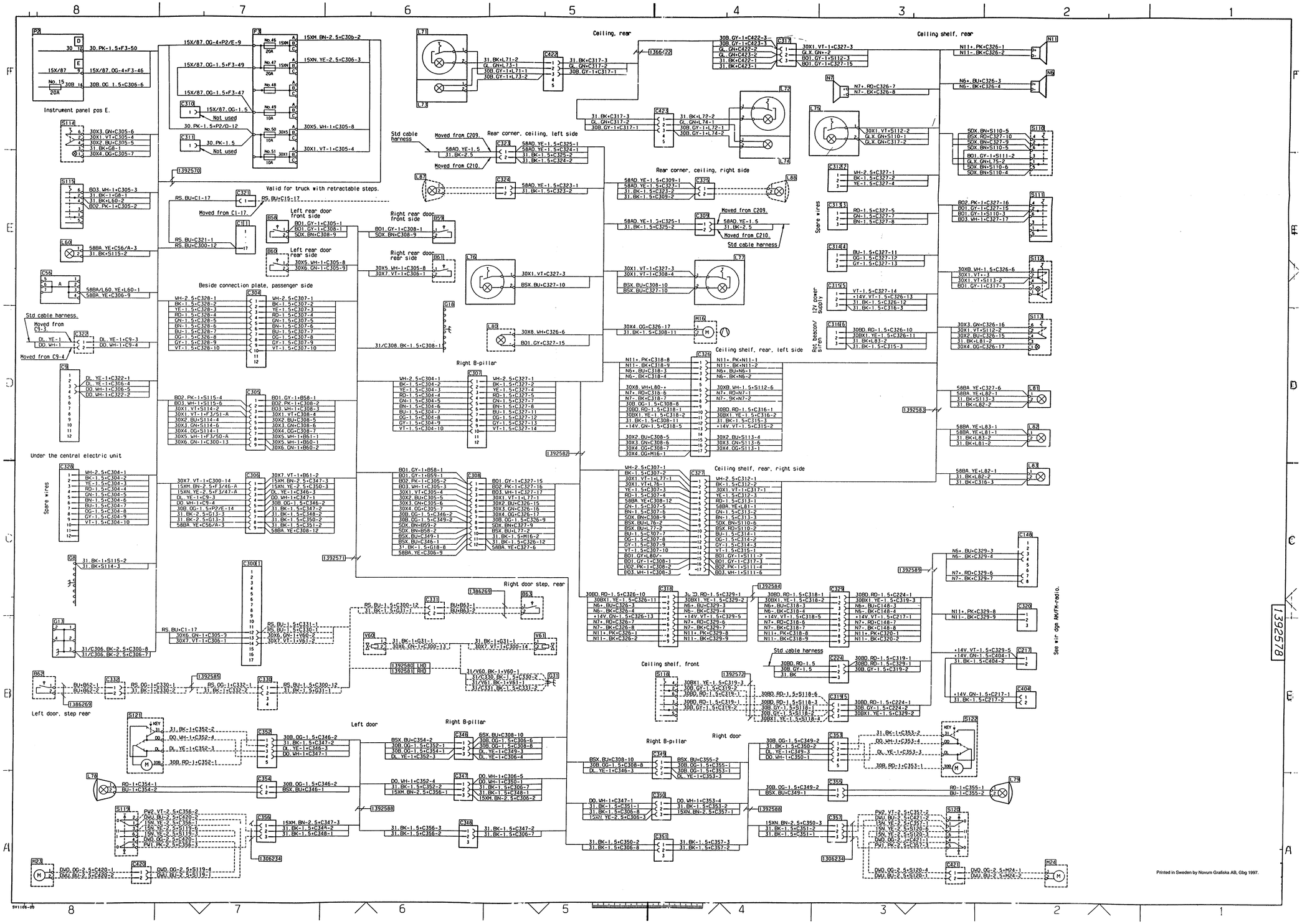
Ceiling, rear
Ceiling shelf, rear
Instrument panel pos E.
Valid for truck with retractable steps.
Rear corner, ceiling, left side
Rear corner, ceiling, right side
Left rear door front side
Left rear door rear side
Right rear door front side
Right rear door rear side
Beside connection plate, passenger side
Std cable harness.
Moved from C9-3.
Moved from C9-4
Under the central electric unit
Spare wires
Right B-pillar
Ceiling shelf, rear, left side
Ceiling shelf, rear, right side
Ceiling shelf, front
Left door
Right door
Right door step, rear
Left door, step rear
Spare wires
12V power supply
Rad beacon/ switch
See wir dgm AM/FM-radio.
1392578
Printed in Sweden by Novum Grafiska AB, Gbg 1997.