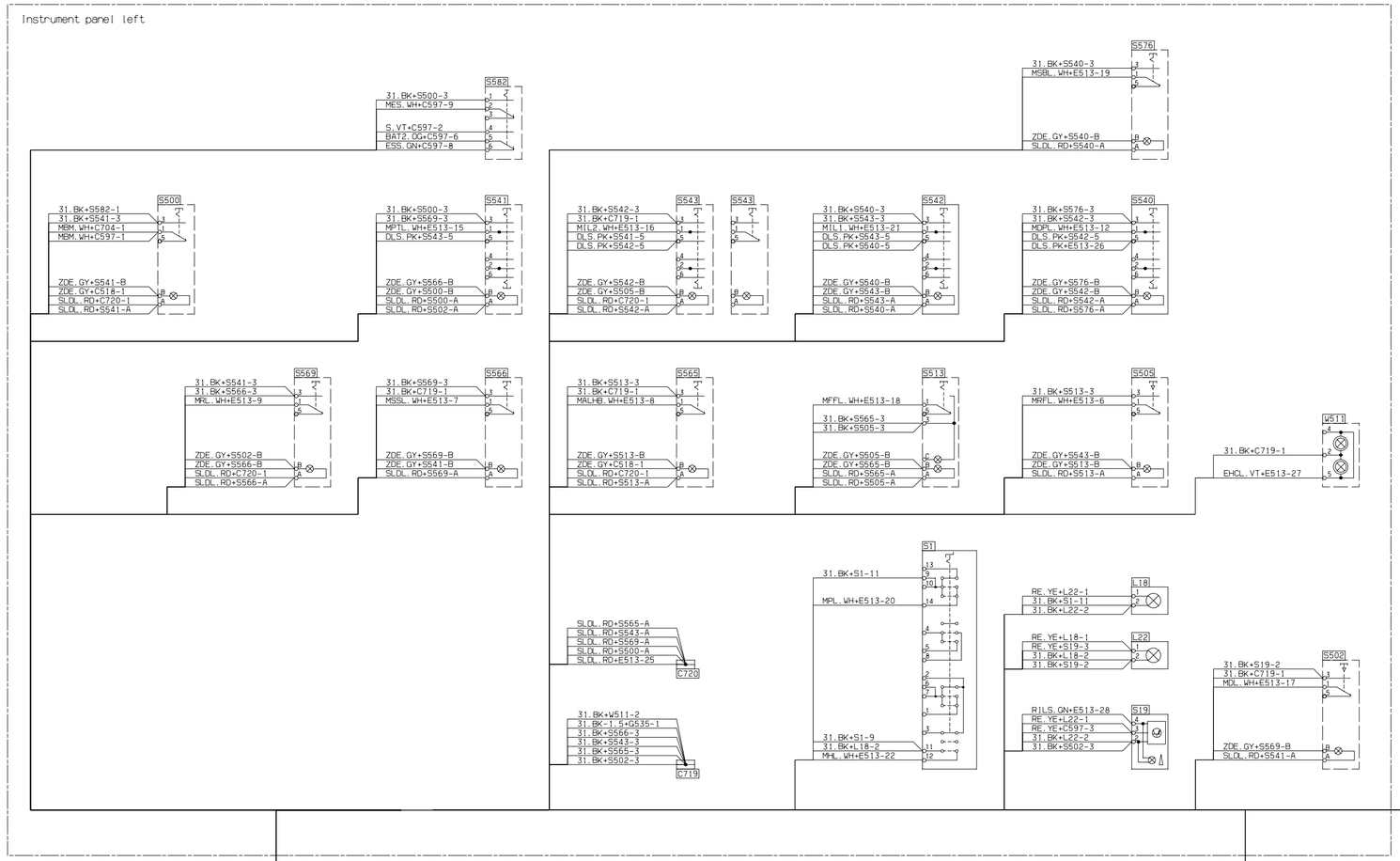

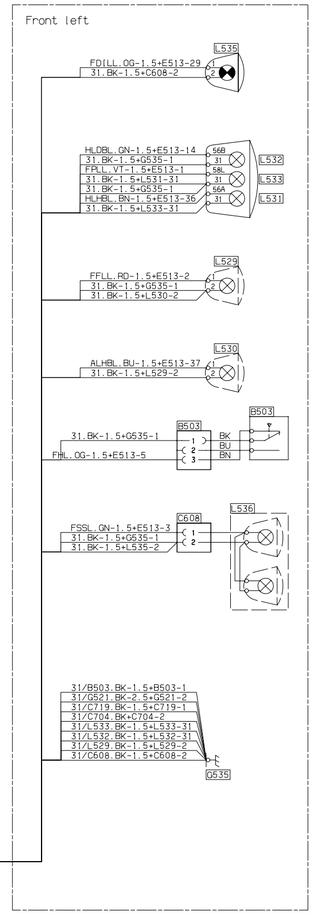

Des.	Pos.	Description		
B503	E2	Switch	Front hatch left	
C518	A7	Connector	1-pole	
C597	B7		9-pole	
C608	D2		2-pole	
C667	B3		3-pole	
C686	A3		2-pole	
C704	B3			
C719	C6	Joining sleeve	1-pole	
C720	D6			
D517	A6	Zener diode		
E513	B8	Node	E	
G521	A7	Ground	instr panel	
G535	C2			
L18	D4	Symbol lighting	rheostat	M
L22	D4		switch lighting	
L529	E2	Front fog lamp	left	
L530	E2	Auxiliary high		
L531	E2	High beam lamp		
L532	F2	Dipped beam lam		
L533	F2	Position lamp		
L535	F2	Direction indic	front left	
L536	D2	School sign light	front	
S1	D5	Switch	lighting	
S19	C4	Rheostat	instrument lighting	
S500	E8	Switch	el.battery master swit	
S502	D3		differential lock	M
S505	E4		rear fog light	
S513	E5		front fog light	
S529	B3		Exterior opening	
S540	E4		drivers place lightnin	M
S541	E6		pay table lightning	
S542	E5		interior lightning 1st cir	
S543	E6		interior lightning 2nd cir	
S565	E6		Auxiliary high beam la	
S566	E6		School sign light	M
S569	E7		Reading lamps	
S576	F4		Signbox lighting	
S582	F6		Emergency stop	
S594	A3		Ext.opening disengagement	
S599	B2		el.battery master switch	
T527	B7.B6	Sensor	Temp. drivers.pl fan inlet	
W511	E3	Warning lamp	emergency hammer	M

Cable designation

150 · BN - 1 + P2 / A - 4

Cable marking

Cable colour (brown)

[1] Conductor area, mm²

Connector designation

Contact housing

Position reference to component where the cable is connected

[1] Unless otherwise stated, conductor area is 0,75 mm²

Bulb tabular		
Code	Type	
A	W2.1x9.5d-24V-2W	
B	BA9s-24V-2W	
C	BA15s-24V-15W	
D	SV8.5-24V-5W	L-39
E	BA15s-24V-10W	
F	BA15s-24V-5W	
G	24V-1.2W	
H	BA15s-24V-21W	
K	P43t-24v-75/70w	H4
L	P45t-24V-55/50W	Bilux
M	W2x4.6d-24V-1.2W	
N	BA7s-24V-3W	
P	PK22s-24V-70W	H3
R	BA15s-24V-21W	

Colour code of electric cables	
Code	Colour
BK	Black
BN	Brown
RD	Red
OG	Orange
YE	Yellow
GN	Green
BU	Blue
VT	Violet
GY	Grey
WH	White
PK	Pink

Additional or optional equipment
Dotted cable Dotted detail

Classification acc to 51284
《C》; –
《M》; –
《D》; –
《L》; 1
《L》1

Power supply and communication for nodes are located on a separate drawing.

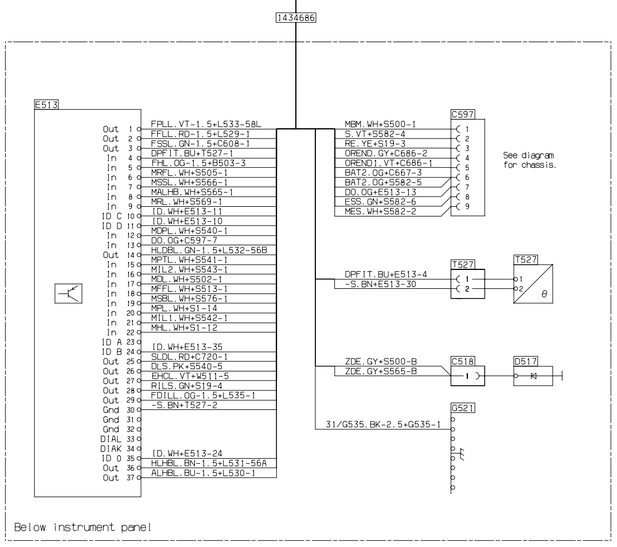

Below instrument panel

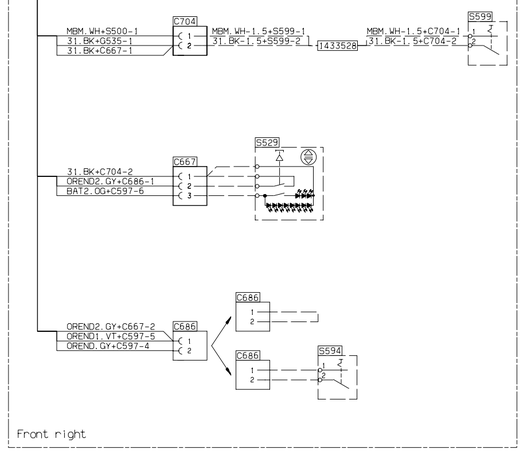

Front right

492633

114969

SV1106-00

SCANIA

16:62-54

Utgåva/Issue/Ausgabe/Uitgave/Edición/Edition/Edizione/Painos 1

Nod E

Node E

Knoten E

Vertakkingspunt E

Nodo E

Nod E

Nod E

Noodi E

BNS 4/BNS 5

1 711 652

© Scania CV AB 1999, Sweden