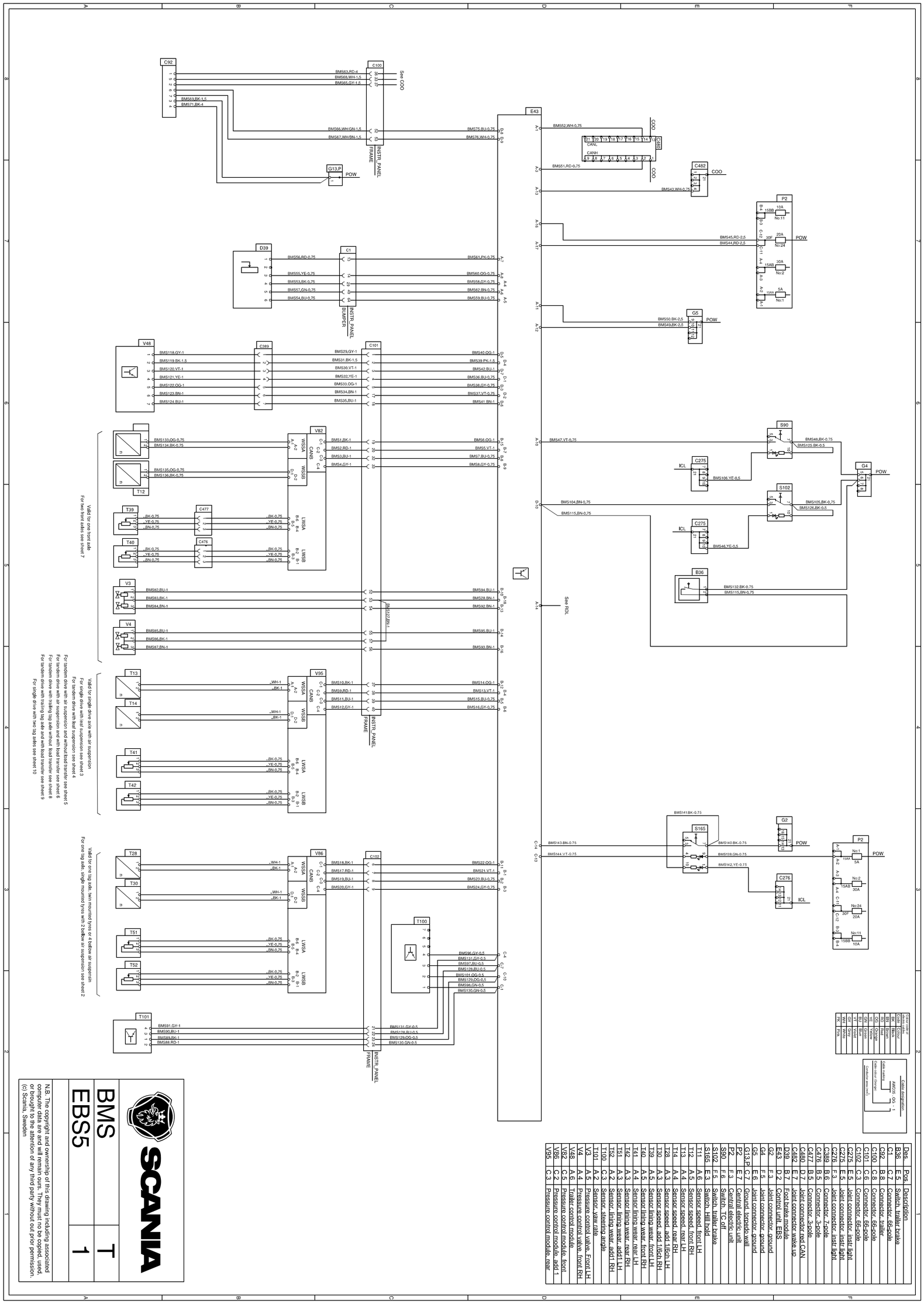

148 853

SCANIA

1 714 713

16:75-09

Issue 3 en-GB
Sheet 1

BMS

Brake management system

EBS5

Main diagram

© Scania CV AB 2008, Sweden